DWG. NO.	REV.

REV.	DESCRIPTION OF CHANGE	MADE	CHKD.	DATE
A	APPROVAL DRAWING	JB	JB	1/12/98

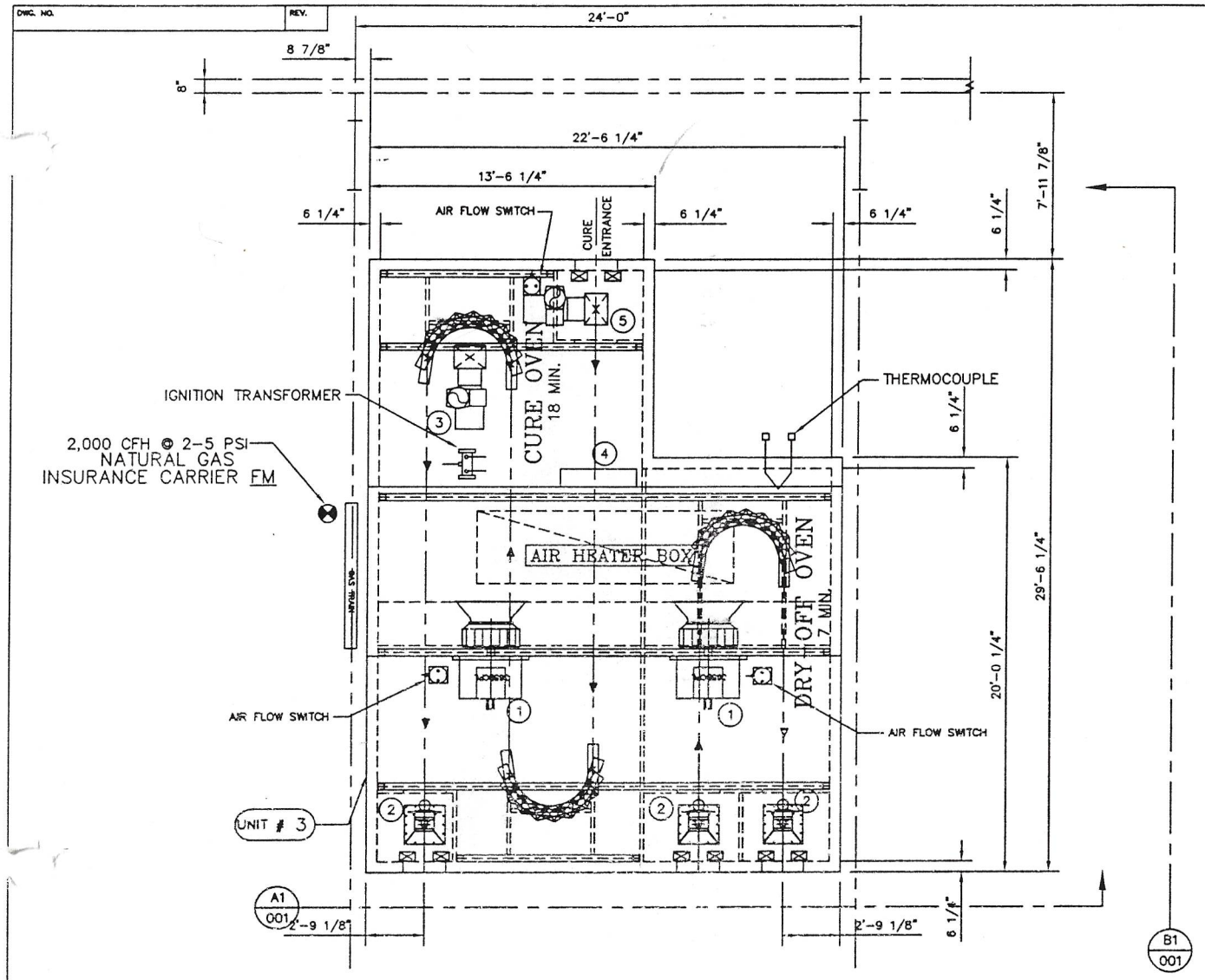

PLAN VIEW

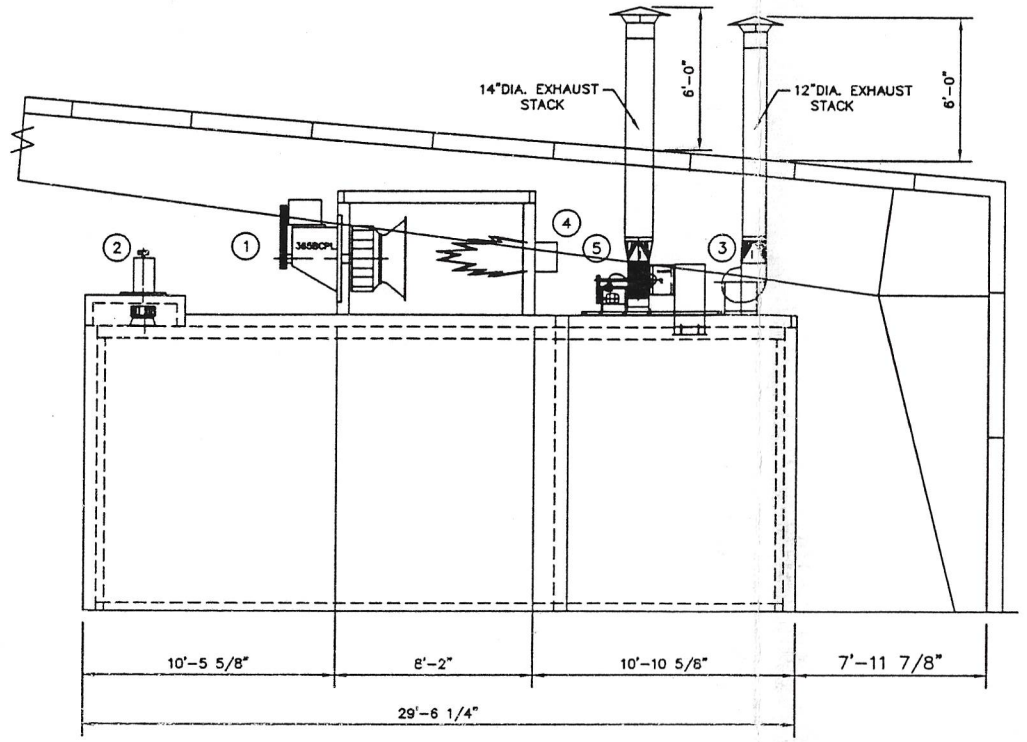

END VIEW B1 001

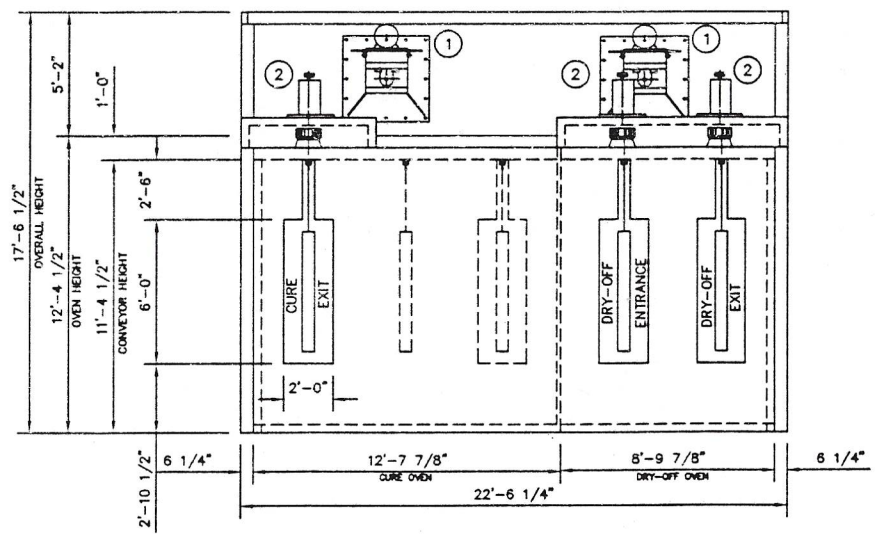

ELEVATION VIEW A1 001

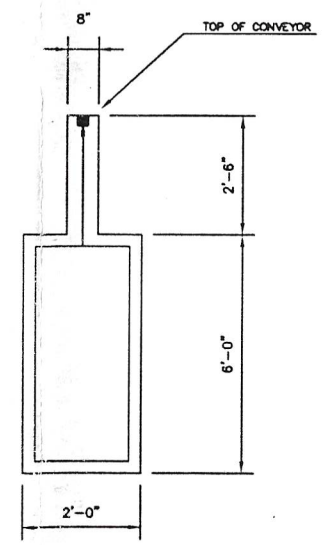

TYP. SILHOUETTE OPNG.

LEGEND

⊗ NATURAL GAS 2-5 PSI

OVEN DATA	CURE OVEN		DRY OVEN		CONVEYOR
OPERATING TEMP.	450	°F	N/A	°F	TYPE: ENCLOSED
TIME PER ZONE	18 MIN.	MIN	7 MIN.	MIN	FPM: 4
CIRC. FAN VOLUME	40,040	CFM	N/A	CFM	C/C: 30"
EXHAUST FAN VOL.	2,773	CFM	N/A	CFM	LBS/HR: 3,120
AIR SEAL FAN(S)	1,800	CFM	1,800	CFM	LBS/HANGER: 20
BURNER RATING	2,000,000	BTU	N/A	BTU	
BTU/HR REQ'D	1,862,600	BTU/HR	N/A	BTU/HR	

UNIT NO.	QTY	DESCRIPTION	SERIAL NO.
3	1	COMBO. OVEN	5158-298

ITEM	QTY	DESCRIPTION
5	1	EXHAUST AIR SEAL FAN 122 FCV W/2 HP. MOTOR 1,800 CFM 1/2" S.P. 460V/3PH/60HZ
4	1	ECLIPSE 200 AH BURNER 2,000-2,500 BTU W/1/3 HP MOTOR 460V/3PH/HZ
3	1	EXH. FAN 122 FCV W/2 HP. MOTOR 2,773 CFM 1/2" 460V/3PH/60HZ
2	3	AIR SEAL FAN 122 BCPL W/2 HP. MOTOR 1,800 CFM 1" S.P. 460V/3PH/60HZ
1	2	REC. FAN 365 BCPL W/20 HP. MOTOR 20,020 CFM 2 1/2" S.P. 460V/3PH/60HZ

BILL OF MATERIAL

SUPERCEDES	
SUPERCEDED BY	
REF.	
APPLICABLE SPEC'S	
DESIGNED BY	S.B.S.
DRAWN BY	J.BRANCH
CHECKED BY	
DATE	3/05/98
SCALE	1/4"=1'-0"
APPROVED BY	

This drawing, design, and/or detail is the exclusive property of Spray Booth Systems, Inc. and is not to be reproduced, used, or disclosed without the written consent of the owner.

5124 Kattenbrun * Box 15070 * Ft. Worth, Tx 76119

CUSTOMER	HUFFY BICYCLES
PROJECT	COMBO. OVEN
TITLE	GENERAL ARRANGEMENT

JOB NO.	CODE	DWG. NO.	SHEET OF	REV.
5158-298	C3	5158A	001	A